DOOR SCHEDULE

DOOR NO.	ROOM NAME	TYPE	DOOR SIZE WIDTH	DOOR SIZE HEIGHT	DOOR MATERIAL	DOOR FINISH	UNDER CUT	FIRE RATING	FRAME TYPE	FRAME MATERIAL	FRAME FINISH	FRAME DETAILS HEAD	FRAME DETAILS JAMB	Sill	HARDWARE	COMMENTS:	SIGNAGE
100A	REPAIR BAYS	A	900	2,100	AL	BR			1	AL	BR	D1/A-511	D1/A-511	B1/A-511	3	ACS, DPS	
100B	REPAIR BAYS	A	900	2,100	AL	BR			1	AL	BR	D1/A-511	D1/A-511	B1/A-511	3	ACS, DPS	
100C	REPAIR BAYS	C	7,300	4,260	ST	PN			3	ST	PN	D5/A-511	C4/A-511	C5/A-511	4	DPS, TYPHOON WIND RATED	
100D	REPAIR BAYS	C	7,300	4,870	ST	PN			3	ST	PN	D5/A-511	C4/A-511	C5/A-511	4	DPS	
100E	REPAIR BAYS	C	7,300	4,260	ST	PN			3	ST	PN	D5/A-511	C4/A-511	C5/A-511	4	DPS	
100F	REPAIR BAYS	C	7,300	4,870	ST	PN			3	ST	PN	D5/A-511	C4/A-511	C5/A-511	4	DPS	
100G	REPAIR BAYS	C	7,300	4,260	ST	PN			3	ST	PN	D5/A-511	C4/A-511	C5/A-511	4	DPS	
100H	REPAIR BAYS	A	900	2,100	AL	BR			1	AL	BR	D1/A-511	D1/A-511	B1/A-511	3	ACS, DPS	
100J	REPAIR BAYS	A	900	2,100	AL	BR			1	AL	BR	D1/A-511	D1/A-511	B1/A-511	3	ACS, DPS	
101A	MAINTENANCE AREA	C	7,300	4,260	ST	PN			3	ST	PN	D5/A-511	C4/A-511	C5/A-511	4	DPS	
101B	MAINTENANCE AREA	A	900	2,100	AL	BR			1	AL	BR	D1/A-511	D1/A-511	B1/A-511	3	ACS, DPS	
102A	TOOL ROOM	B	1,800	2,100	HM	PN			2	HM	PN	D3/A-511	D3/A-511	B1/A-511	8		D1/A-701
102B	TOOL ROOM	D	2,100	1,067	AL	BR			4	AL	BR	MANFR	MANFR	MANFR	MANFR		
102C	TOOL ROOM	C	3,040	3,040	ST	PN			3	ST	PN	D5/A-511	C4/A-511	C5/A-511	4	DPS	
103A	COMBAT SPARES	B	1,800	2,100	HM	PN			2	HM	PN	D3/A-511	D3/A-511	B1/A-511	8		D1/A-701
103B	COMBAT SPARES	D	2,100	1,067	AL	BR			4	AL	BR	MANFR	MANFR	MANFR	MANFR		
103C	COMBAT SPARES	C	3,040	3,040	ST	PN			3	ST	PN	D5/A-511	C4/A-511	C5/A-511	4	DPS	
104	CONSOLIDATED BENCH REPAIR	B	1,800	2,100	HM	PN			2	HM	PN	D3/A-511	D3/A-511	B1/A-511	8		D1/A-701
105	ARMS VAULT	E	1,067	2,100	ST VAULT	FACTORY			5	ST VAULT	FACTORY	MANFR	MANFR	MANFR	FACTORY	ACS ON DAY GATE	
107	ELEC ROOM	B	1,800	2,100	AL	BR			2	AL	BR	D1/A-511	D1/A-511	B1/A-511	1		D1/A-701
108	MECH ROOM	B	1,800	2,100	AL	BR			2	AL	BR	D1/A-511	D1/A-511	B1/A-511	1		D1/A-701
109	NON-SENSITIVE SECURE STORAGE ROOM	A	900	2,100	HM	PN			1	HM	PN	D3/A-511	D3/A-511	B1/A-511	9		D1/A-701
110	FLUID DISTRIBUTION ROOM	B	1,800	2,100	AL	BR			2	AL	BR	D3/A-511	D3/A-503	B1/A-503	1		D1/A-701
111A	ADMIN & CONTROL ROOM	A	900	2,100	HM	PN			1	HM	PN	D3/A-511	D3/A-503	A1/A-503	10	ACS	D1/A-701
111B	ADMIN & CONTROL ROOM	A	900	2,100	HM	PN			1	HM	PN	D3/A-511	D3/A-503	A1/A-503	10	ACS	D1/A-701
111C	ADMIN & CONTROL ROOM	D	2,100	1,067	AL	BR			4	AL	BR	MANFR	MANFR	MANFR	MANFR		
112	OFFICE	A	900	2,100	HM	PN			1	HM	PN	D2/A-511	D2/A-511	A1/A-511	10		D1/A-701
113	OFFICE	A	900	2,100	HM	PN			1	HM	PN	D2/A-511	D2/A-511	A1/A-511	10		D1/A-701
114	SIPR ROOM	A	900	2,100	HM	PN			1	HM	PN	D2/A-511	D2/A-511	A1/A-511	7	ACS	D1/A-701
115	NIPR ROOM	A	900	2,100	HM	PN			1	HM	PN	D2/A-511	D2/A-511	A1/A-511	6		D1/A-701
116	JAN / LAUNDRY	A	900	2,100	HM	PN			1	HM	PN	D2/A-511	D2/A-511	A1/A-511	6		D1/A-701
117A	HALL	A	900	2,100	AL	BR			1	AL	BR	D1/A-511	D1/A-511	A1/A-511	3	ACS, DPS	
117B	HALL	A	900	2,100	HM	PN			1	HM	PN	D3/A-511	D3/A-511	A1/A-511	11		D1/A-701
118	WOMEN	A	900	2,100	HM	PN			1	HM	PN	D2/A-511	D2/A-511	A1/A-503	5	MARBLE THRESHOLD	D3/A-701
119	MEN	A	900	2,100	HM	PN			1	HM	PN	D2/A-511	D2/A-511	A1/A-511	5	MARBLE THRESHOLD	D2/A-701
120	SHOWER LOCKER	A	900	2,100	HM	PN			1	HM	PN	D2/A-511	D2/A-511	A1/A-511	5	MARBLE THRESHOLD	D1/A-701
121	BREAK/TRAINING/CONFERENCE ROOM	A	900	2,100	HM	PN			1	HM	PN	D3/A-503	D3/A-503	A1/A-511	11		D1/A-701
122A	TRAINING ROOM	A	900	2,100	HM	PN		45 MIN	1	HM	PN	D3/A-511	D3/A-511	A1/A-511	9	STC 45	D1/A-701
122B	TRAINING ROOM	A	900	2,100	HM	PN		45 MIN	1	HM	PN	D3/A-511	D3/A-511	A1/A-511	11	STC 45	D1/A-701
122C	TRAINING ROOM	A	900	2,100	HM	PN		45 MIN	1	HM	PN	D3/A-511	D3/A-511	A1/A-511	11	STC 45	
122D	TRAINING ROOM	A	900	2,100	AL	BR			1	AL	BR	D1/A-511	D1/A-511	A1/A-511	2	DPS, EXIT ONLY, STC 45	
200	EQUIPMENT PLATFORM	A	900	2,100	AL	BR			1	AL	BR	D1/A-511	D1/A-511	A1/A-511	12	DPS	

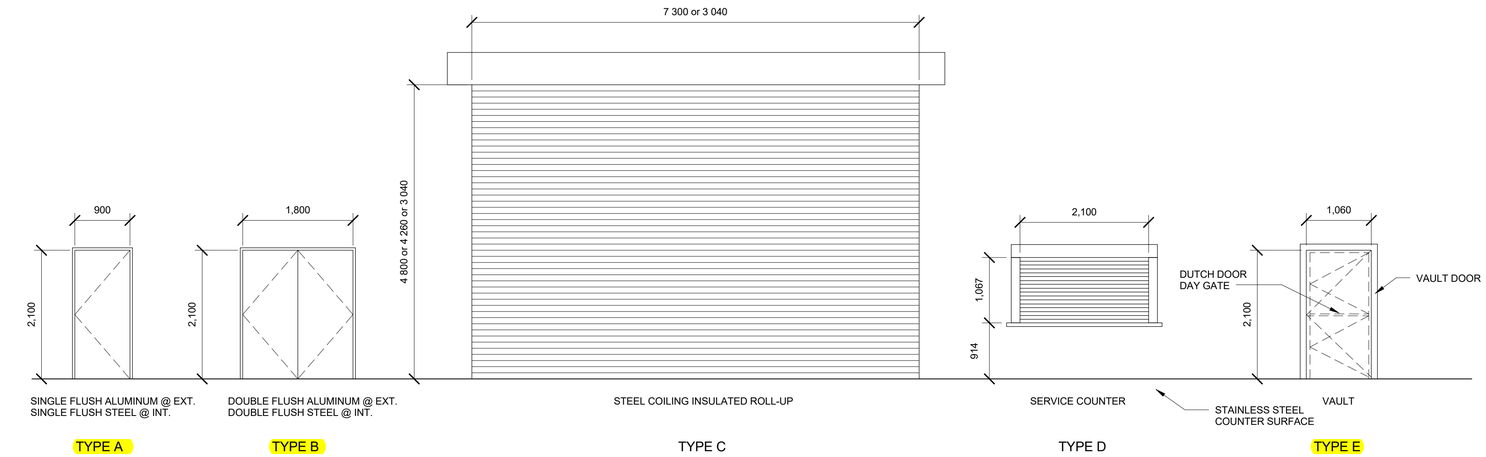

B1 / AA603 DOOR TYPES

1 : 50

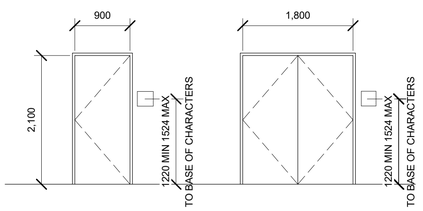

A1 / AA603 SIGNAGE LOCATIONS

1 : 50

DETAIL NOTES

1. ALUMINUM SERVICE COUNTER ROOL-UP DOOR
2. 16 GA STAINLESS STEEL COUNTER SURFACE ADHERED TO PLYWOOD COUNTER BASE
3. 19 MM PLYWOOD COUNTER BASE SCREWED TO SUB BASE
4. 2X SUB BASE EXPANSION ANCHORED TO CONCRETE WALL
5. WOOD TRIM, PAINT

ABBREVIATIONS

AL	ALUMINUM
ST	STEEL
HM	HOLLOW METAL
BR	BRONZE ANODIZED
PN	PAINT
VAULT	VAULT DOOR WITH DAY GATE
ACS	ACCESS CONTROL SYSTEM
DPS	DOOR POSITION SWITCH
MANFR	BY MANUFACTURER

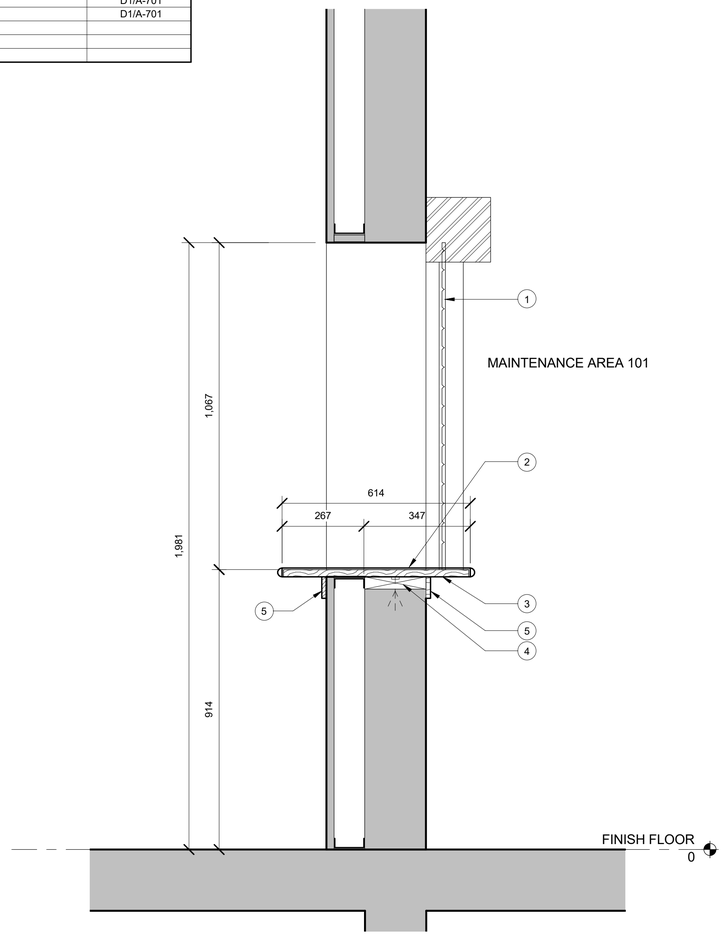

B5 / AA603 SERVICE COUNTER DETAIL (TYP)

1 : 10

US Army Corps of Engineers®
Japan Engineer District

SIGNED

THIS WORK WAS PREPARED BY ME OR UNDER MY SUPERVISION

MARK	DESCRIPTION	DATE	APPR.

SUBMITTAL DATE: 12 JULY 2018
SOLICITATION NO.: W912DY-18-B-0003
CONTRACT NO.:
DRAWING CODE: XF-214-410-01
DESIGNED BY: GDW
CKD BY: GDW
DWN BY: GDW
SUBMITTED BY: XXX YYY
PLOT DATE: 7/12/2018 10:08:19 PM
PLOT SCALE: 1:1
FILE NAME:
SIZE: ISO A1

U.S. ARMY CORPS OF ENGINEERS
JAPAN ENGINEER DISTRICT
OKINAWA AREA OFFICE
APO AP 96376-5132

U.S. ARMY CORPS OF ENGINEERS
ALASKA ENGINEER DISTRICT
2204 THIRD STREET
ANCHORAGE, ALASKA 99506

FY18 SOCOM, PN 81903
SPECIAL OPERATIONS FORCES (SOF)
TACTICAL EQUIPMENT MAINTENANCE FACILITY (TEMF) (1-1 SFG)
TORII STATION, OKINAWA, JAPAN

TEMF ARCHITECTURAL
DOOR SCHEDULE AND TYPES

SHEET IDENTIFICATION
AA603

RTA